Attachment 2

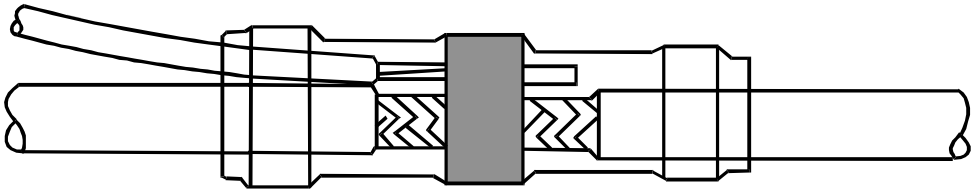

SOLDER SLEEVES

Overview

This topic describes the termination and installation procedures for shielded cable on aircraft.

Solder Sleeves

Shielded cable, in one form or another, are used in many electrical systems. This topic details termination techniques for shielded cable using solder sleeves.

Shielded Cable

A shielded cable, as shown in Figure 2-1, consists of one or more insulated conductor/s (wires) surrounded by a conductive sleeving, all encased in a protective jacket.

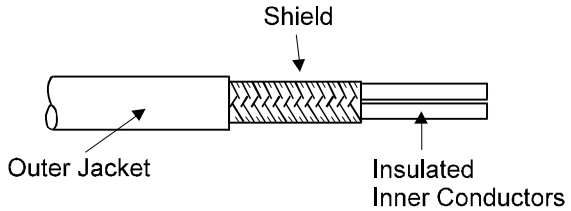

Figure 2-1
Shielded Cable

The conductive sleeving is referred to as a shield, and as the name suggests, is used to shield against electro-magnetic interference, usually by connecting the shield to an earth point.

Illustrated in Figure 2-2 is a small selection of the many different types of shields that are available.

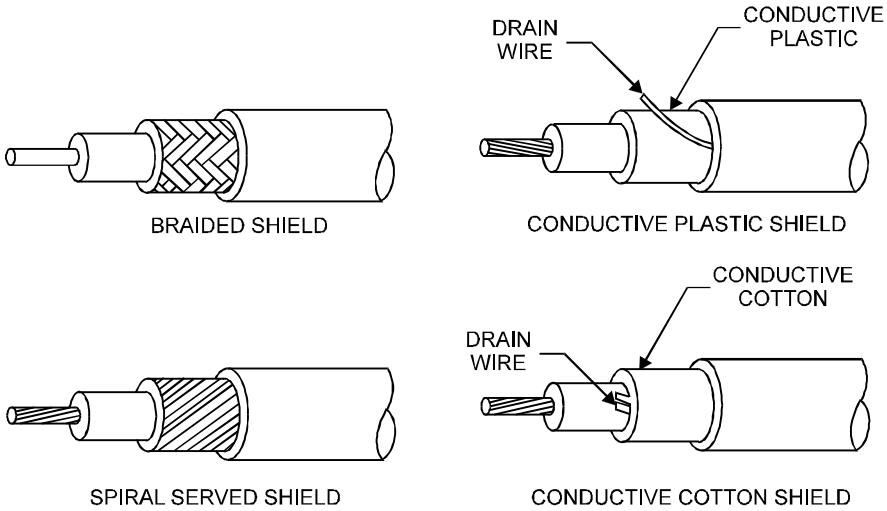

Figure 2-2
Shielded Cable

To be useful, a cable must be flexible. This, of course, requires the shield to be flexible and not rigid. The braided shield, composed of metal strands braided together to form a conductive envelope, enables flexibility of movement while still covering nearly every point of the underlying insulation.

Braided shielding is used in many cable combinations. A convenient method of terminating, repairing or replacing a section of braided shield is to use a solder sleeve.

Solder Sleeve Construction

The one piece solder sleeve provides a strong soldered connection which is completely insulated and encapsulated. The solder sleeve consists of a heat-shrinkable thermoplastic sleeve containing a preform of fluxed solder (band of solder) and thermoplastic inserts at each end. Figure 2-3 illustrates the solder sleeve construction.

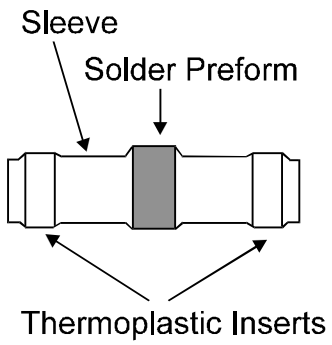

Figure 2-3
Solder Sleeve Construction

The solder sleeve can be used to:

- connect a cable shield to a ground lead,
- terminate a cable, and
- repair or replace the cable shield.

Examples of each of these are illustrated in Figure 2-4.

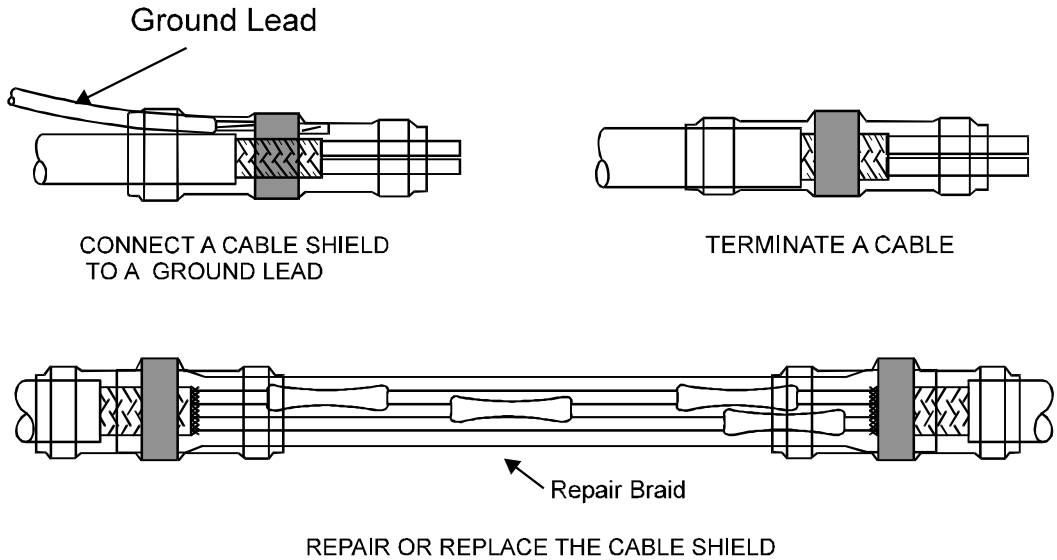

Figure 2-4
Examples of Solder Sleeve Applications

How Solder Sleeves Work

To use a solder sleeve requires the application of heat. When the sleeve is placed over a cable and heated the solder preform melts and flows, soldering the shield. The solder sleeve is designed so that the preform applies the correct amount of solder and flux. This results in the optimum solder connection for strength and minimisation of electrical resistance. The application of heat also causes the outer sleeve to shrink and the thermoplastic inserts to melt. The meltable inserts seal each end of the sleeve and provide complete environmental protection of the termination. The result is a soldered; strain relieved and environmentally protected termination.

To assist with inspection of the connection, the outer sleeve is transparent and contains a thermochromic temperature indicator. The thermochromic temperature indicator is a coloured strip in the centre of the sleeve and is used to determine if the solder sleeve has been sufficiently heated. To do this, the colored strip fades through to clear when the metal surfaces to be joined have reached wetting temperature.

Types of Solder Sleeves

As with any component used to maintain aircraft, solder sleeves should conform to a specification. Accordingly, there are Mil Spec two styles of solder sleeve termination:

- M83519/l, and
- M83519/2.

The M83519/l, (shown in Figure 2-5) and the M83519/2, (shown in Figure 2-6), are identical in construction, function and use, except that the M83519/2 contains a pre-tinned ground lead.

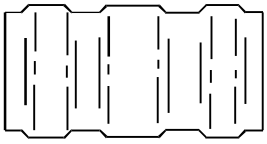

Figure 2-5
The M83519/l Type of Solder Sleeves

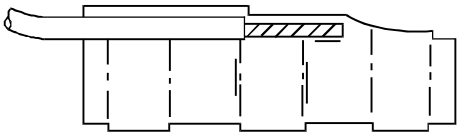

Figure 2-6
The M83519/2 Type of Solder Sleeves

Solder Sleeve Heating Tools

Proper application of heat is important to produce a reliable solder connection and sealing of the solder sleeve. The sleeves are designed to be installed using a hot air source or alternately an infra-red heating tool.

The type of tool selected will depend largely on the work environment; ie whether you are working in a workshop or on an aircraft. If working on an aircraft, the tool must be portable and present no risk of igniting fuel vapour.

The three heating tools in common use are:

- infrared heating tool,
- compressed air/nitrogen heating tool, and
- turbofan type heat gun.

Infrared Heating Tool

The infrared heating tool is a self-contained portable unit. The main components are labelled in Figure 2-7. Infrared heat tools offer several advantages over other methods of heating solder sleeves including faster shrinking and solder flow. Also being less complicated, they are easier to set up.

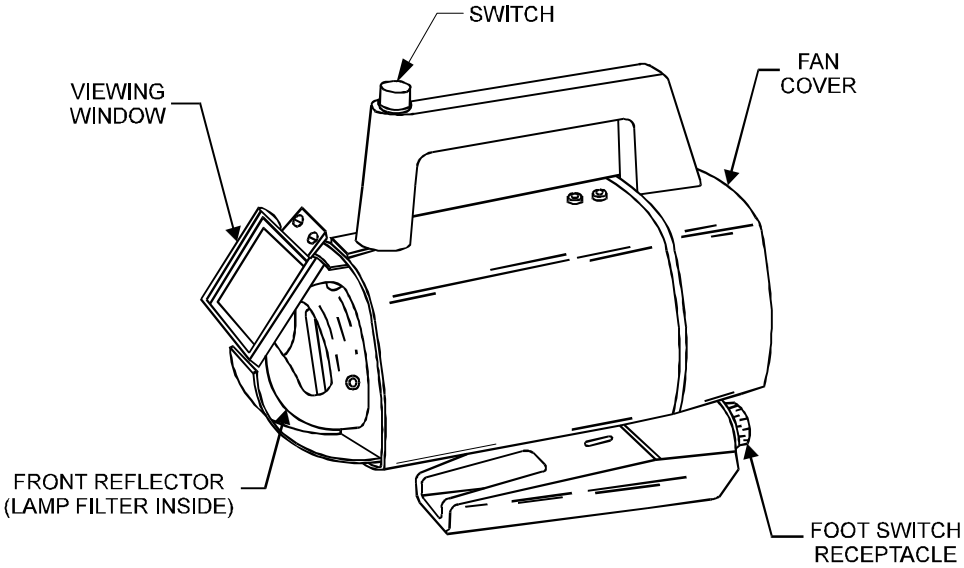

Figure 2-7
Infrared Heating Tool

Compressed Air/Nitrogen Heating Tool

The compressed air/nitrogen heating tool (illustrated in Figure 2-8) is a portable source of heat for use with heat-shrinkable tubing and solder sleeves. As the unit is fully enclosed, it is approved for use on fuelled aircraft. To operate, the heating tool must be connected to an external source of compressed air/nitrogen and power.

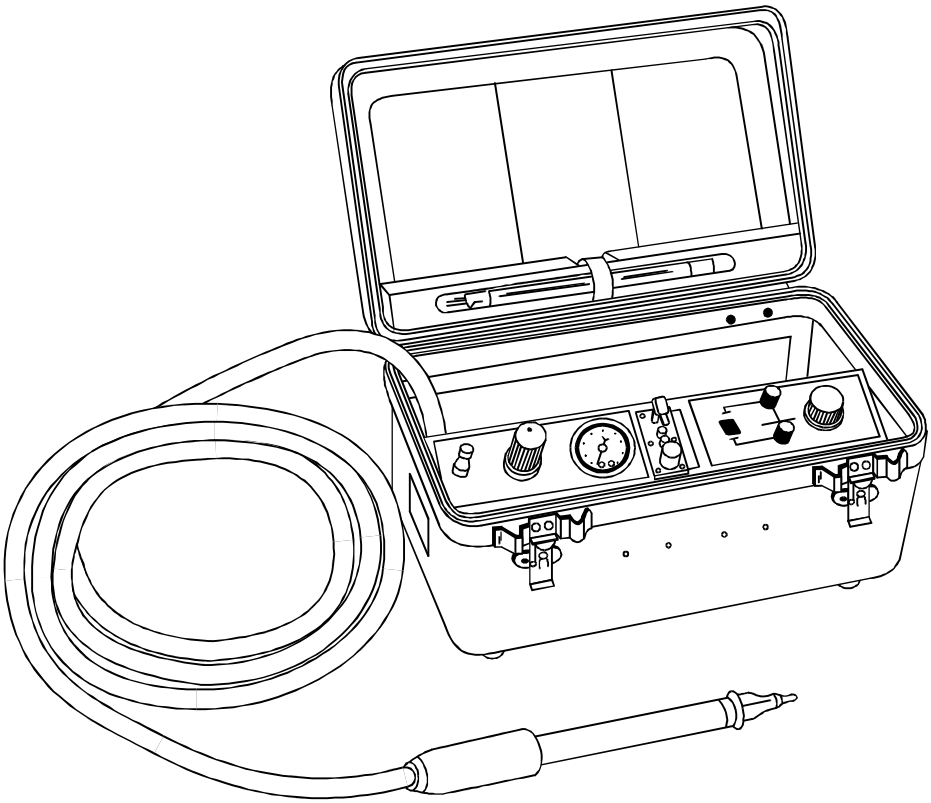

Figure 2-8
Compressed Air/Nitrogen Heating Tool

When operating the compressed air/nitrogen heating tool, the following warnings apply:

Warning

The nozzle and output air from the heat gun get very hot. Use extreme care while operating the heat gun to avoid serious burns.

The use of nitrogen with the heat gun in an enclosed area can be hazardous. Discharge of nitrogen into a poorly ventilated area can result in asphyxiation.

Do not use electrical power from an aircraft under repair. Aircraft power should be off during repair of aircraft electrical systems. Use electrical power from a ground power unit.

Turbofan Type Heat Gun

The Thermogun Mark II heating tool, illustrated in Figure 2-9, is a rugged stand mounted or hand held hot air tool. The heating tool has been engineered with a turbo fan driven blower and a double jacketed element housing for heavy duty use. It has features such as adjustable side vents for limited temperature control, and a wide variety of hot air reflectors. The Thermogun provides precise control when terminating a broad range of heat shrinkable products including boots and tubing up to 75 mm in diameter.

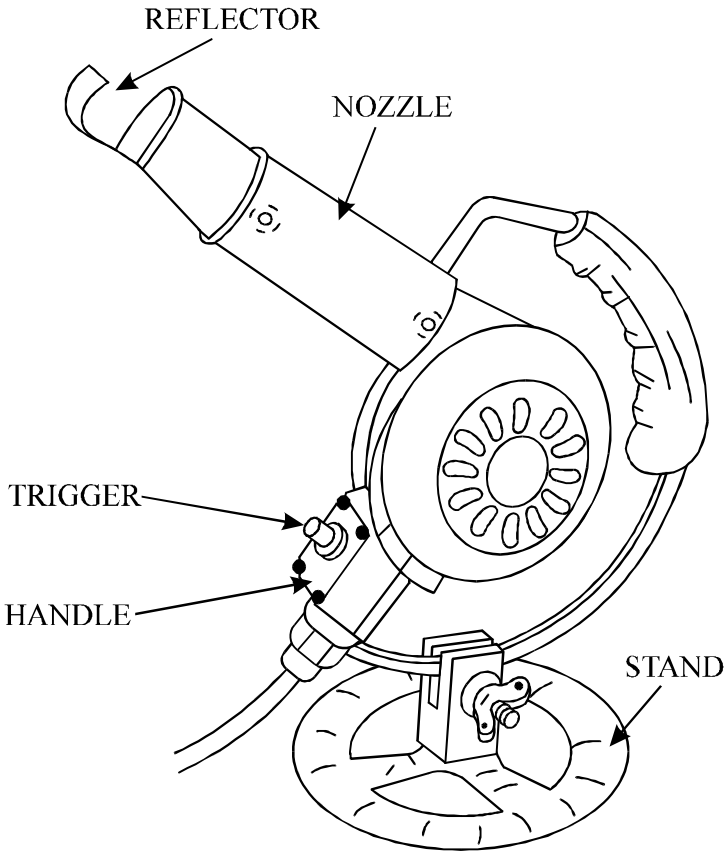

Figure 2-9
Turbofan Type Heat Gun

There are numerous models and variations of the turbofan type heat guns available. The following description of operation is similar for most turbofan type heat guns.

Pre-operation

Before using the heating tool, carry out the following:

1. Visually check the reflector for foreign material accumulation.
2. If accumulation is found, remove the reflector by pulling it straight off the nozzle.
3. Clean foreign material off reflector surfaces with a soft cloth and isopropyl alcohol.

Warning

Isopropyl alcohol is flammable. Do not use in the presence of sparks, heat or flame.

4. Install the reflector being careful not to touch the reflective surface.

Reflector Selection

Heating tool attachments consist of a range of reflectors. These reflectors are attached to the nozzle of the heating tool and concentrate the heated output around the material. Note, the exact reflectors supplied will vary according to the make and model of the heating tool. A selection of the various reflectors you may encounter are as follows:

Termination sleeve reflector (Figure 2-10) - Used for heating solder termination sleeves and shrinking small diameter tubing.

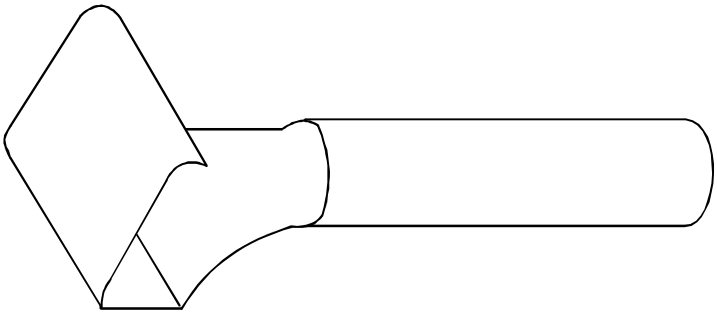

Figure 2-10
Termination Sleeve Reflector

Miniature termination sleeve reflector (Figure 2-11) - Used for heating small solder termination sleeves and making terminations in a confined area.

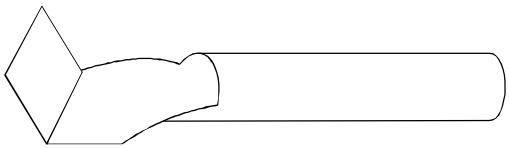

Figure 2-11
Miniature Termination Sleeve Reflector

Boot and tubing reflector (Figure 2-12) **-** Used for shrinking tubing and moulded components such as strain-relief boots and potting caps.

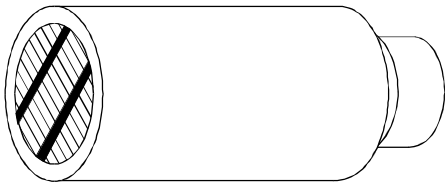

Figure 2-12
Boot and Tubing Reflector

Needle point reflector (Figure 2-13) **-** Used where a lower, more precise air-flow is required to terminate micro-miniature connectors, or to repair or modify low temperature insulated wire terminations.

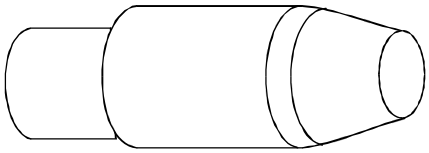

Figure 2-13
Needle Point Reflector

Large boot and tubing reflector (Figure 2-14) **-** Used for installing large diameter tubing and moulded parts.

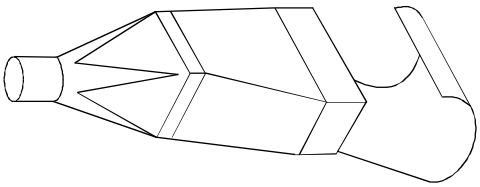

Figure 2-14
Large Boot And Tubing Reflector

Operation

To operate the heat guns, proceed as follows:

Warning

Do not use heat guns with electric motors when working on aircraft that have not been defueled and purged. Sparks generated by the electric motors may ignite fuel vapour.

Nozzle and output air of heat guns get very hot. Use extreme care while operating a heat gun to avoid serious burns.

1. Select the appropriate reflector for the application.
2. Install the reflector on the front of the heat gun nozzle by pushing the reflector straight on.

3. Check the power requirement of the tool being used and plug the cord into the appropriate power supply.
4. Prepare the assembly to be heated (this will be covered in detail in the next section).
5. Turn the heating tool on and allow a short warm up period.
6. Place the assembly into the heating area.
7. Observe the assembly during the heating process. After the assembly has received sufficient heat, remove the assembly from the heating area and turn the heat gun off.
8. Inspect the assembly for correct forming (this will also be covered in detail in the next section).

Post Operation

After using the heating tool, proceed as follows:

1. Disconnect the power connector from the power source.
2. Allow a few minutes for the reflector to cool.
3. Visually check the reflector for foreign material accumulation. If material is found, clean as described in the pre-operation procedure.

Cable Preparation

Before terminating the shielded wire, the cable needs to be prepared. To prepare the shielded cable, use one of the following methods applicable to the intended application:

For centre stripped cables rated above 125°C, prepare as per dimensions illustrated in Figure 2-15.

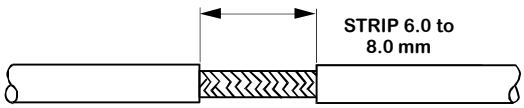

Figure 2-15
Preparation of Centre Stripped Cable

Solder Sleeve Application

For end stripped cables rated above 125°C, prepare as per dimensions illustrated in Figure 2-16.

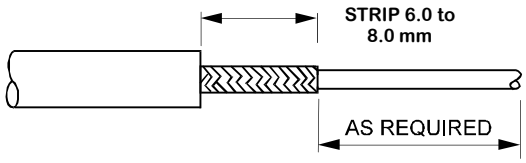

Figure 2-16
Preparation of End Stripped Cable

For cables rated between 105°C and 125°C, or to build up the diameter of small cables, fold back the braid and prepare as per dimensions illustrated in Figure 2-17.

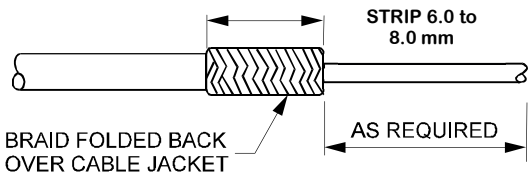

Figure 2-17
Preparation of End Stripped Braided Cable

Size Selection

To provide proper sealing and connection, the solder sleeve must be selected by size and cable dimensions

Installation of the Mil Spec M83519/1 Solder Sleeve

The M83519/1 solder sleeve does not have a pre-installed ground lead so it will be required to prepare a ground lead prior to installation. The procedure to manufacture a ground lead and install the solder sleeve is as follows:

1. Select and prepare a ground lead suited to application from a relevant aircraft wiring publication. Strip one end to the dimension as illustrated in Figure 2-18.

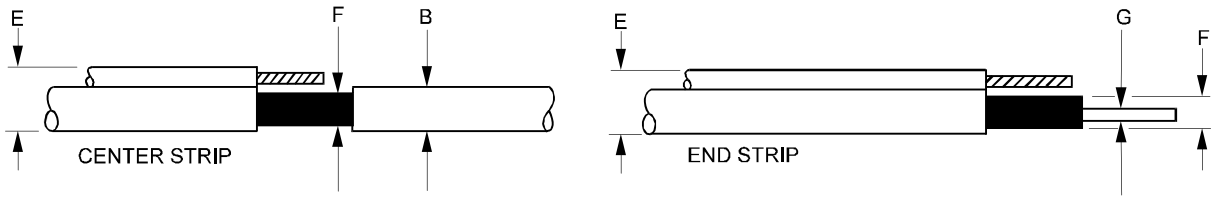

TERMINATOR SIZE	CABLE DIMENSIONS (mm)				IDENTIFICATION NUMBER
	B max.	E max.	F max.	G max.	
1	2.0	2.7	0.9	0.5	SO XX1R
2	2.7	3.7	1.4	0.8	SO XX2R
3	4.3	5.0	2.2	1.3	SO XX3R
4	6.0	6.5	3.3	1.8	SO XX4R
5	7.0	7.6	4.3	2.5	SO XX5R

Figure 2-18
Installation of the M83519/1 Solder Sleeve

2. Assemble the cable, ground lead, and solder sleeve ensuring no strands protrude to puncture the sleeve, as illustrated in Figure 2-19. Note, the ground lead can enter the sleeve from either side.

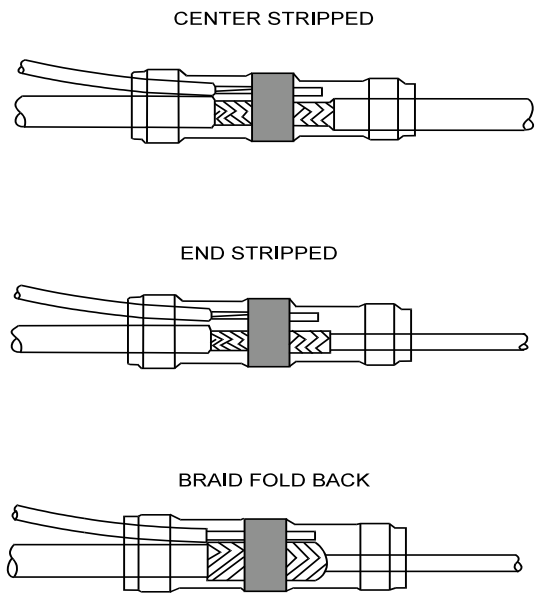

Figure 2-19
Examples of Solder Sleeve Assembles

3. Apply heat directly at the solder preform using a suitable heat gun deflector. Remove from heat when the solder melts and wets to the shield braid and ground lead, as illustrated in Figure 2-20.

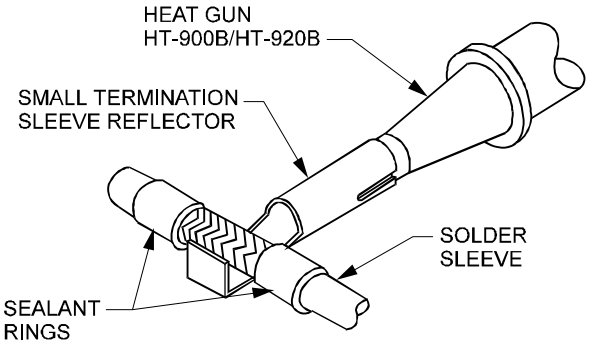

Figure 2-20
Installation of the M83519/1 Solder Sleeve

NOTE

The collapse of the solder preform does not indicate solder flow. Continue to apply heat until the solder flows and forms a fillet between the shield and the ground lead.

4. If necessary, heat each end of the sleeve to complete shrinkage of the tubing and inserts.

Warning

Do not handle the termination when hot as serious burns will result. Allow the termination to cool prior to handling.

5. Inspect the termination according to the following guidelines:

Unacceptable Termination (Insufficient Heat)

- The thermal indicator is clearly visible as a dull red colour.
- The original shape of the solder preform is clearly visible.
- The sealing inserts have not flowed.
- The contour of the braid and/or lead is blocked by solder.

Acceptable Termination (Minimum Solder Flow)

- The thermal indicator shows slight traces of dull red colour.
- The solder has lost all its original shape.
- The sealant inserts have melted and flowed along the wires.
- The shield and lead contours are visible.

- A definite fillet is visible between lead and shield.

Acceptable Termination (Maximum Solder Flow)

- The dull red colour has disappeared from the thermal indicator.
- A definite fillet is clearly visible between the lead and shield.
- The joint area is visible despite the browning sleeve.

Unacceptable Termination (Overheated)

- The joint area is not visible because of severe darkening of the outer sleeve.
- The solder fillet is not visible along the lead and shield interface.
- Wire insulation is damaged outside of the sleeve.
- Re-shrink, if necessary, until acceptable conditions exist.
- If an overheated condition has occurred, cut out the damaged termination and start the procedure again.

Installation of the M83519/2 Solder Sleeve

Installation of the M83519/2 solder sleeve is the same as the M83519/1 with the exception of the ground lead preparation not being required as it is pre-installed.

Page Intentionally Left Blank